Avanti 77, Profile Clamping Vise

jaw width 46 mm, max. clamping range 97 mm

Item No. 44085-46

Clamping range	0 - 97 mm (0" - 3.82")
Dimensions	102 x 77 x 48 mm (4.02" x 3.03" x 1.89")
Clamping method	by friction
Workpiece shape	prismatic / cylindrical / asymmetrical
Packaging Unit	1 Set
Weight	2.17 kg (4.78 lbs)
Material	Steel

LANG Technik GmbH, Albstraße 1–6, 73271 Holzmaden

jaw width 46 mm, max. clamping range 97 mm

Item No. 44085-46

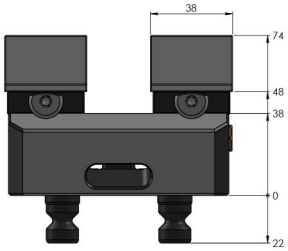

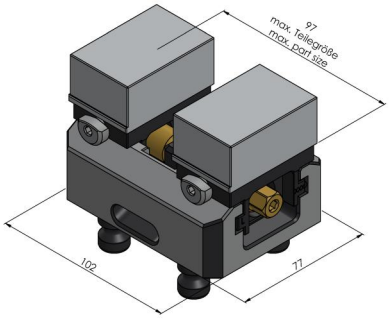

jaw width 46 mm, max. clamping range 97 mm
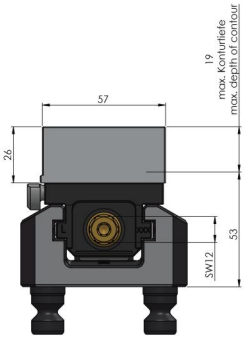
Item No. 44085-46