Quick•Point®, Centering Studs

50 x 30 mm

Item No. 455030

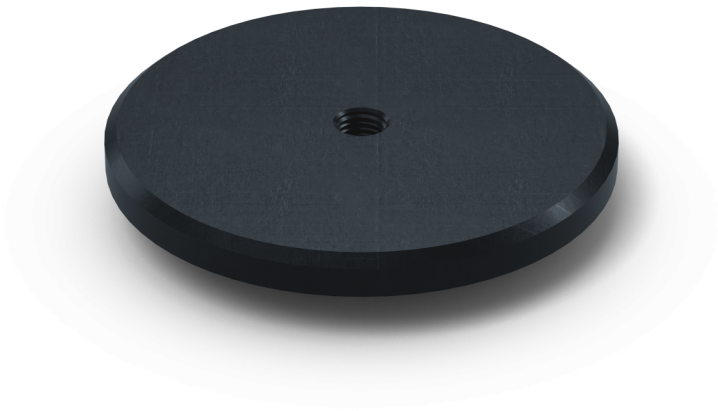

Dimensions	⌀ 50 x 30 mm
Packaging Unit	1 Stück
Weight	0.09 kg
Material	Stahl

LANG Technik GmbH, Albstraße 1–6, 73271 Holzmaden

50 x 30 mm
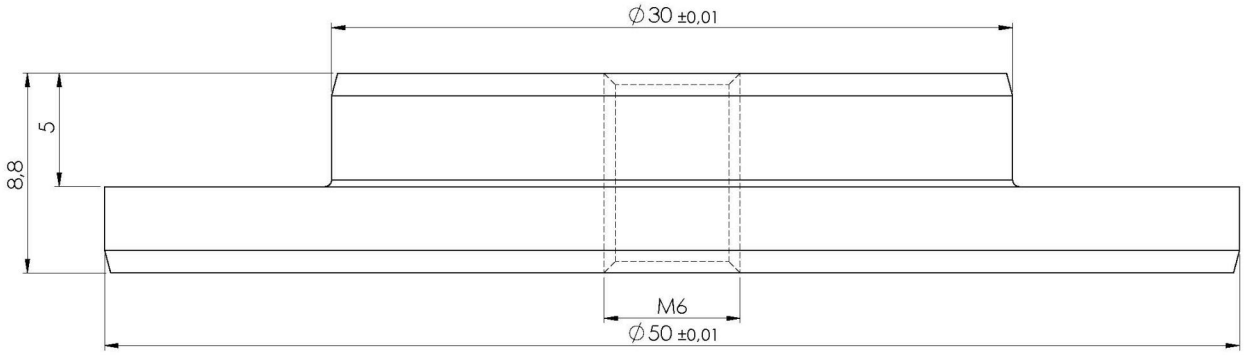
Item No. 455030